Euler-Euler and Euler-Lagrange Modeling of Wood Gasification in Fluidized Beds

Michael Oevermann Stephan Gerber Frank Behrendt

Berlin Institute of Technology

Faculty III: School of Process Sciences and Engineering

Department of Energy Engineering

Chair for Energy Process Engineering and Conversion Technologies for Renewable Energies

Fasanenstr. 89, 10623 Berlin, Germany

CFB-9, May 13-16, 2008, Hamburg

Overview

- Motivation
- Modeling approaches
  - Euler-Lagrange / Discrete Element Method (DEM)
  - Euler-Euler
- Results
- Summary and outlook

Motivation - simulation of wood gasification

- Renewed interest in producing gas from biomass
- Gasification in fluidized bed reactors
- Lack of detailed knowledge about the complex interactions between heterogeneous reactions and the fluid mechanics in fluidized beds
- Develop closure laws for large scale models

CFD modeling for particulate flow

Continuum models | Euler-Lagrange | DNS

tractable problem size

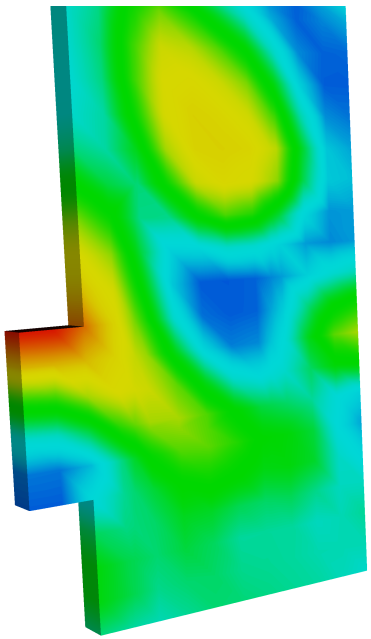

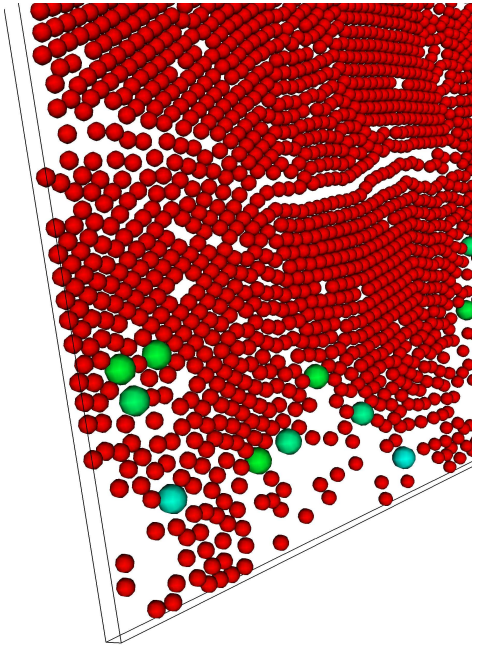

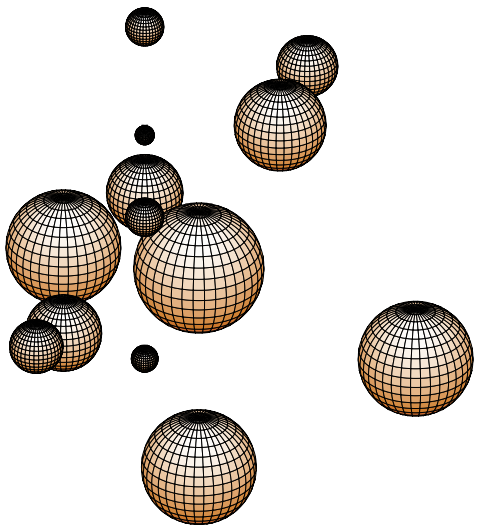

computational cost

Euler-Lagrange model

Basis:

OpenFOAM (`www.opencfd.co.uk/openfoam`)

Modules:

1. Solver for the gasphase (OpenFoam)
2. Lagrangian particle tracking / DEM (OpenFOAM)
3. Particle combustion / gasification model

   (here: simple zero dimensional particle model)

Euler-Lagrange model – gasphase

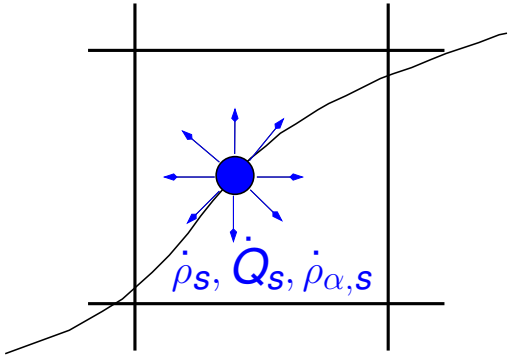

Mass / momentum balance:

$$(\rho\epsilon)_t + \nabla \cdot \epsilon\rho u = \epsilon\dot{\rho}_s$$

$$(\epsilon\rho u)_t + \nabla \cdot \{\epsilon\rho uu\} + \nabla p - \nabla \cdot \tau + \epsilon\rho g = F_s$$

Energy / species balance:

$$(\rho\epsilon E)_t + \nabla \cdot [(\rho E + p)\epsilon u] + \nabla \cdot q = \dot{Q}_s$$

$$(\rho\epsilon u Y_\alpha)_t + \nabla \cdot [\rho\epsilon Y_\alpha u] - \epsilon\dot{w}_\alpha = \epsilon\dot{\rho}_{\alpha,s}$$

Euler-Lagrange model – particle tracking

- Equation of motion for every single particle

$$
\begin{aligned}
m_i \frac{\mathrm{d}\vec{v}_i}{\mathrm{d}t} + \vec{v}_i \frac{\mathrm{d}m_i}{\mathrm{d}t} &= \sum_j \vec{F}_{ij} \\
J_i \frac{\mathrm{d}\vec{\omega}}{\mathrm{d}t} + \vec{\omega} \frac{\mathrm{d}J_i}{\mathrm{d}t} &= \sum_j \vec{M}_{ij}
\end{aligned}
$$

- Fluid dynamic forces (drag, buoyant, Magnus, etc.) with empirical correlations
- Contact forces via spring-damper modell
- Multiple particle contacts possible

Euler-Lagrange – contact forces by DEM

(Cundall & Strack, 1979)

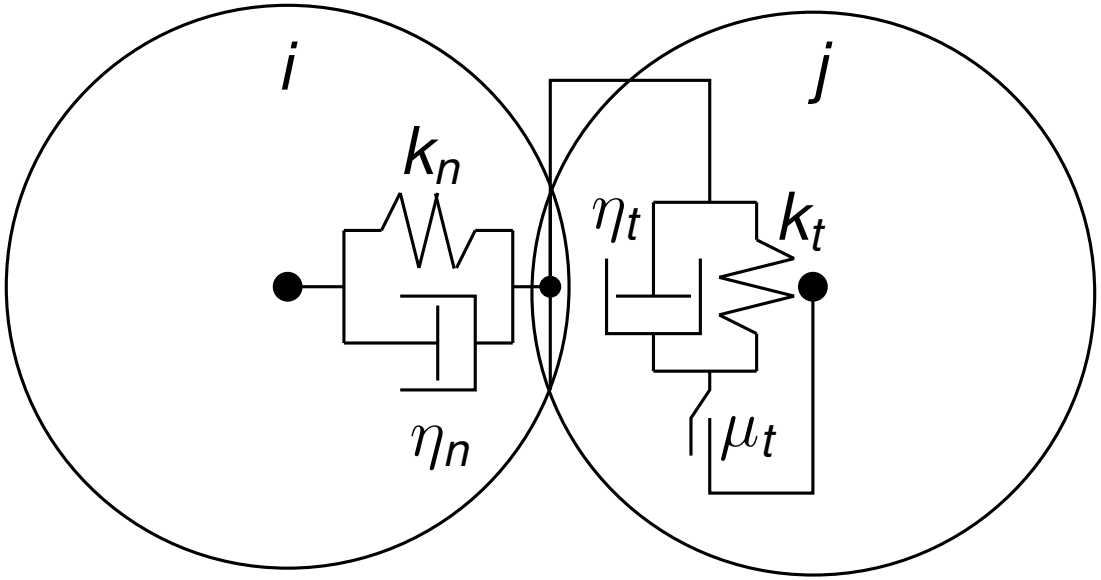

$$\vec{F}_{ij}^{n} = k_n \delta \vec{n} + \eta_n \vec{v}_{ij}^{n}$$

$$\vec{F}_{ij}^{t} = \min\left(\mu_t |\vec{F}_{ij}^{n}| \vec{t},\ \eta_t |\vec{v}_{ij}^{t}|\right)$$

Euler-Lagrange model – coupling

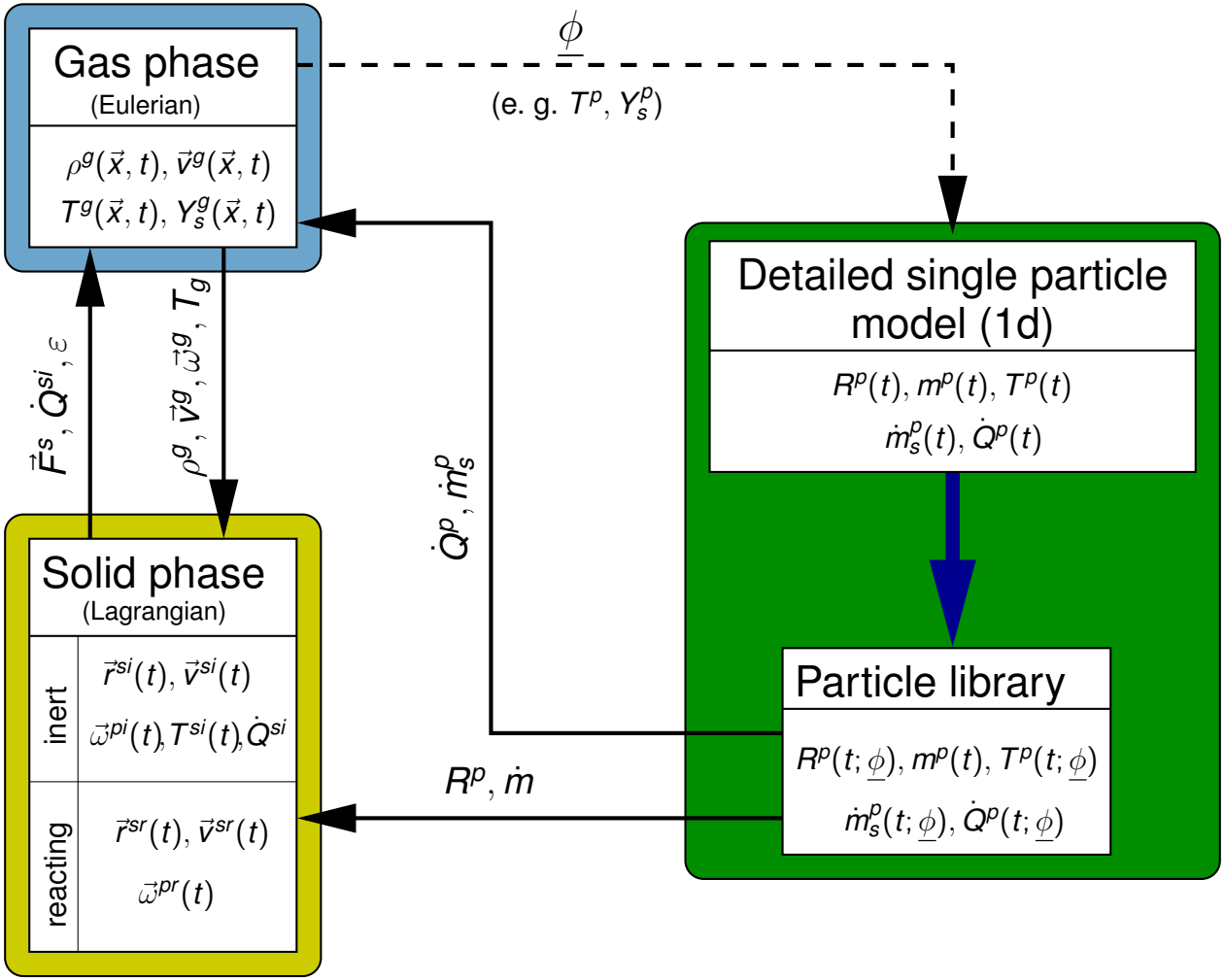

Euler-Euler model

- Public Domain Code MFIX (`www.mfix.org`)
- 1 gas phase
- 3 solid phases: wood (4mm), 2 x charcoal (1mm, 2mm)
- 5 homogeneous gas phase reactions (rev.),

  4 heterogeneous reactions carbon
- Models for primary and secondary pyrolysis

Gas phase chemistry

Simple reaction mechanism

Species: H_2, O_2, N_2, CO, CO_2, CH_4, H_2O, tar

1. $2\,CO + O_2 \rightleftharpoons 2\,CO_2$
2. $2\,H_2 + O_2 \rightleftharpoons 2\,H_2O$
3. $2\,CH_4 + 3\,O_2 \rightleftharpoons 2\,CO + 4\,H_2O$
4. $CO + H_2O \rightleftharpoons H_2 + CO_2$
5. $CH_4 + H_2O \rightleftharpoons CO + 3\,H_2$

Pyrolysis / heterogeneous reactions

Primary pyrolysis (Grönli, Melan (2000))

wood $\rightarrow$ $H_2O(g)$, $CO(g)$, $CO_2(g)$, $H_2(g)$, $CH_4(g)$, tar(g), char(s).

Secondary pyrolysis (Boroson et al. (1989))

$$\text{tar} \rightarrow CO(g),\ CO_2(g),\ H_2(g),\ CH_4(g),\ \text{tar}_{\text{inert}}.$$

Heterogeneous reactions

C	+	O_2	$\rightarrow$	CO_2				(Ross and Davidson(1982))
C	+	CO_2	$\rightarrow$	$2\,CO$				(Biggs and Agarwal(1997))
C	+	H_2O	$\rightarrow$	CO	+	H_2		(Hobbs et al. (1992))
C	+	$2\,H_2$	$\rightarrow$	CH_4				(Hobbs et al. (1992))

Reactor at the department

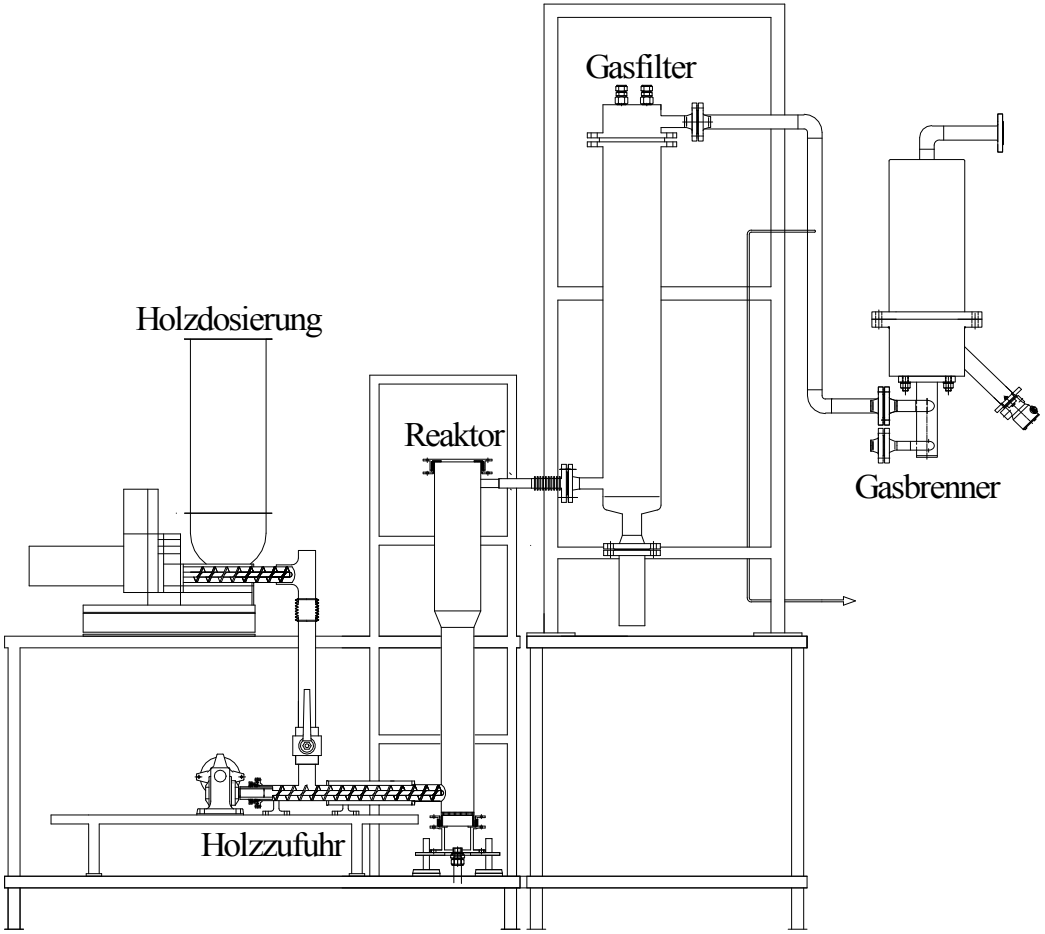

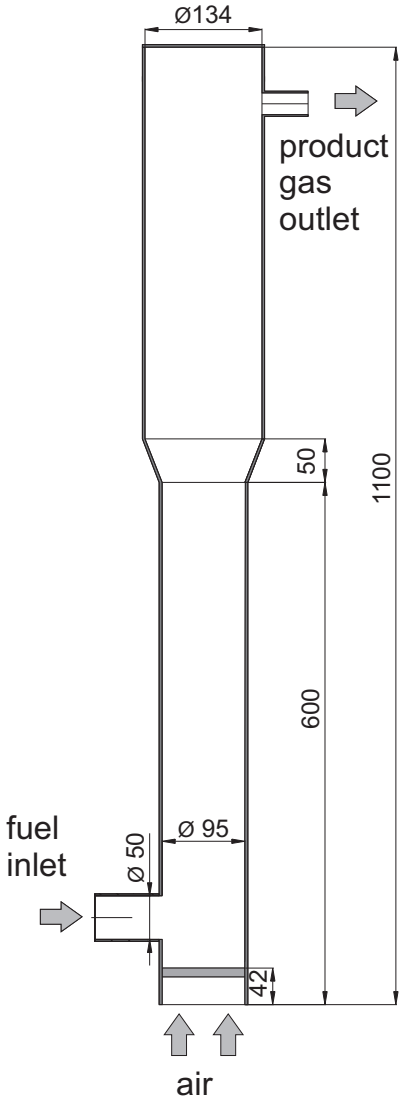

Reactor at the department

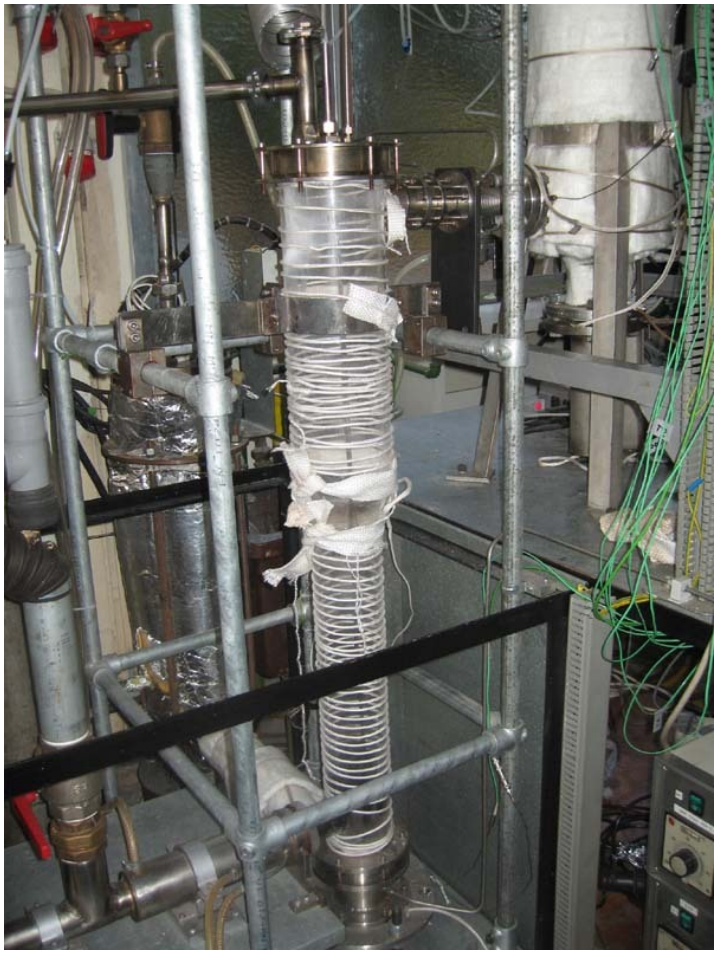

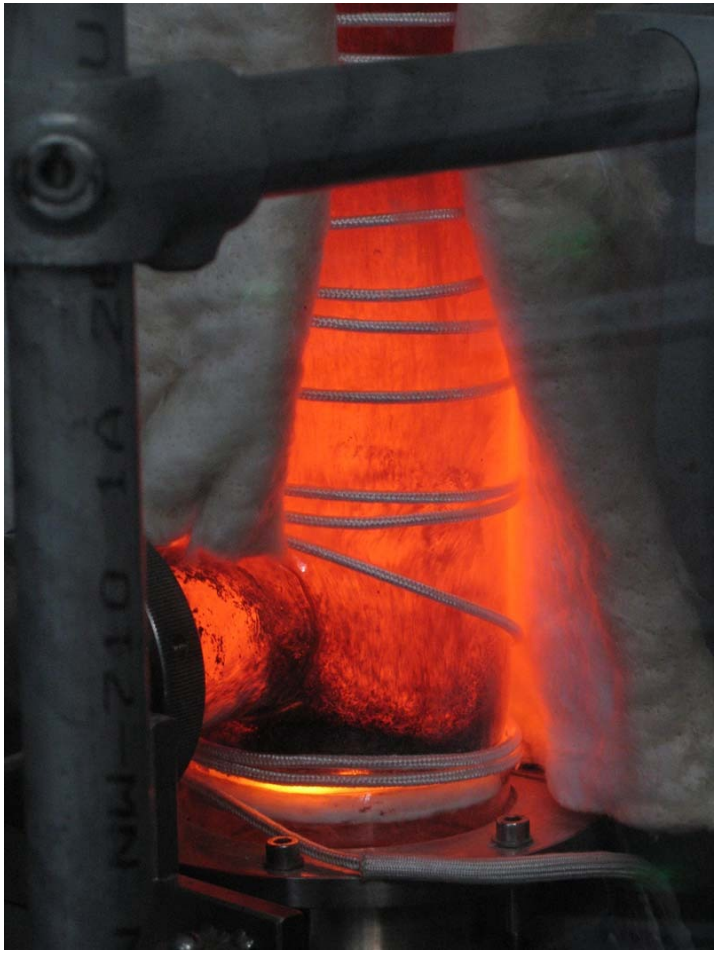

Reactor – inlet boundaries

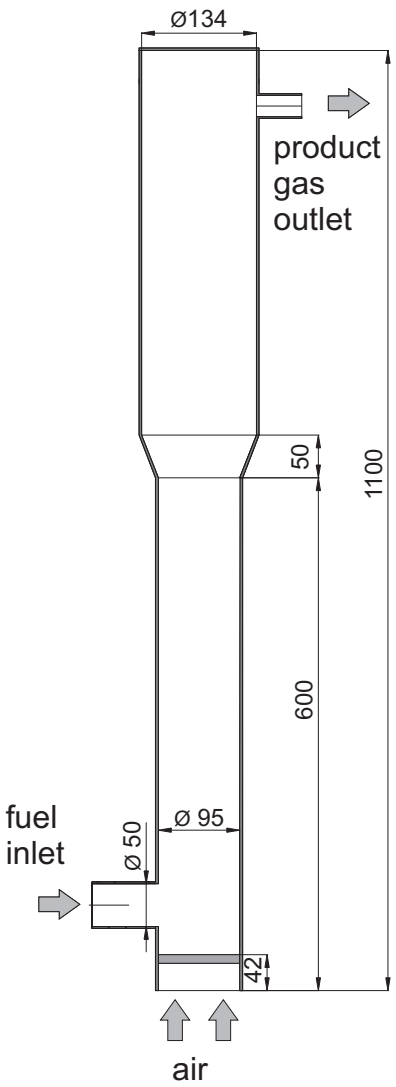

wood inflow:

wood	T = 150 °C, v = 0.08 cm/s
bulk density	0.385 g/cm^3

air inflow:

gas species	21% O_2, 79% N_2
	T = 400 °C, v = 25 cm/s

Results - Euler-Euler model

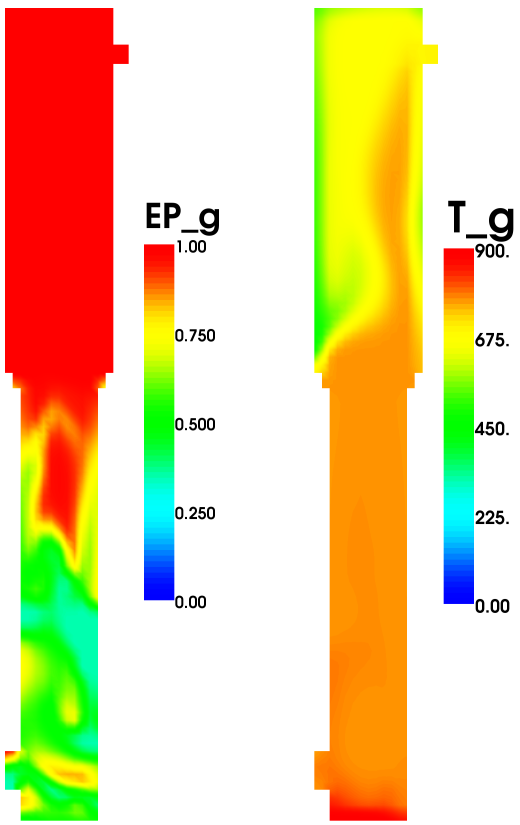

play

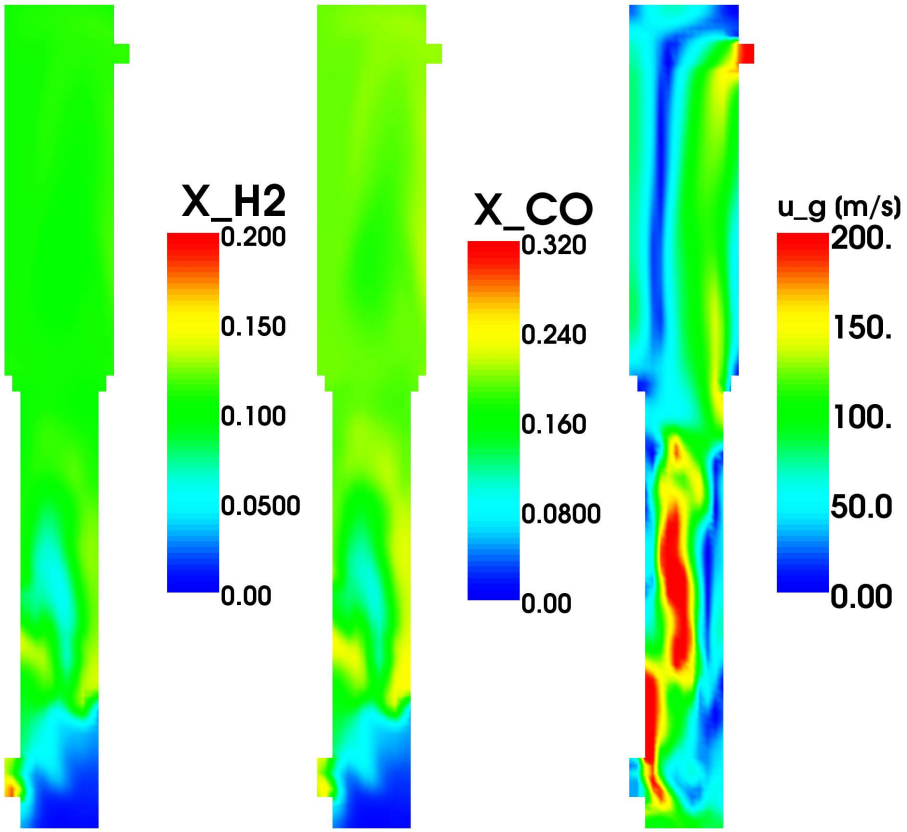

play

Results – exhaust gas composition

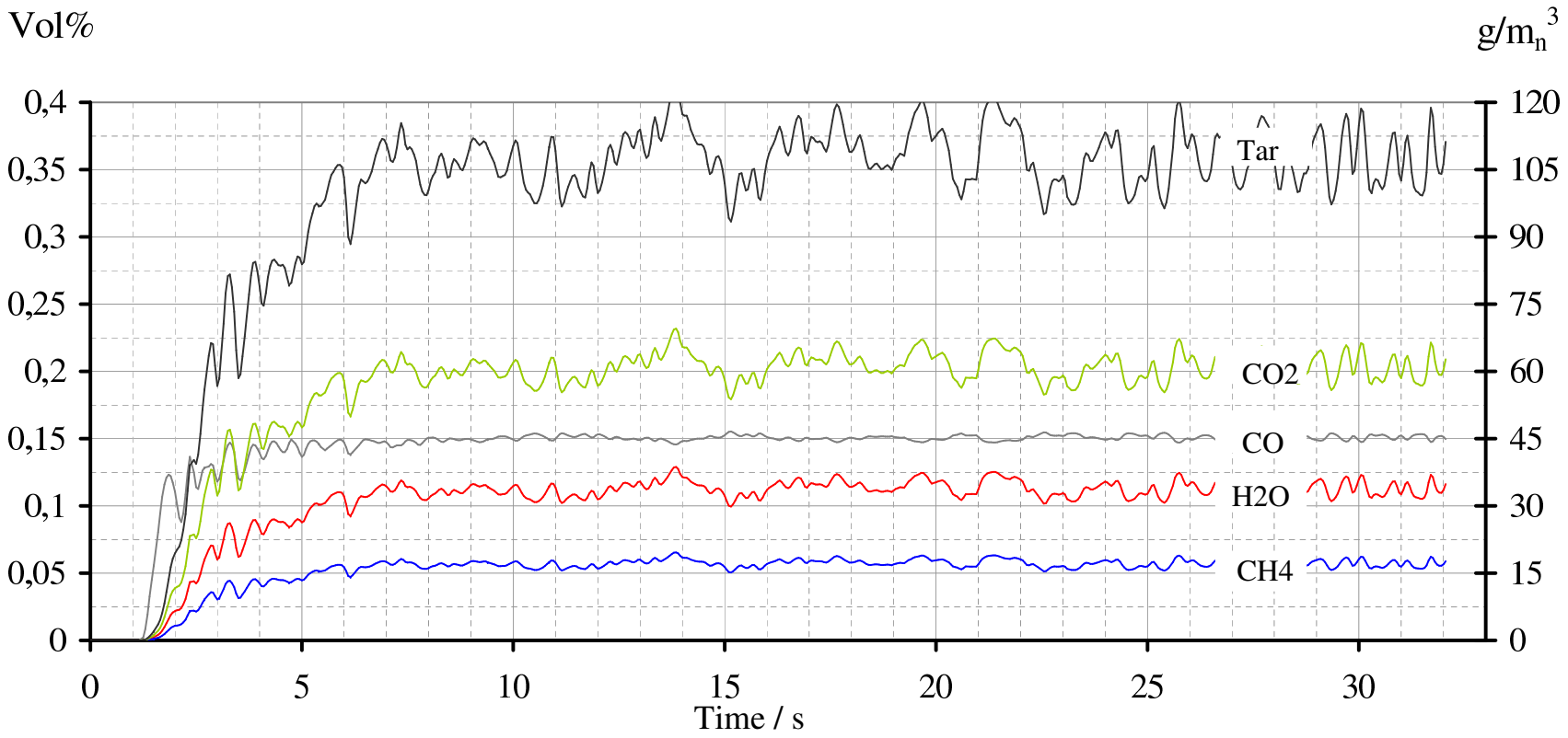

Results - Euler-Euler model

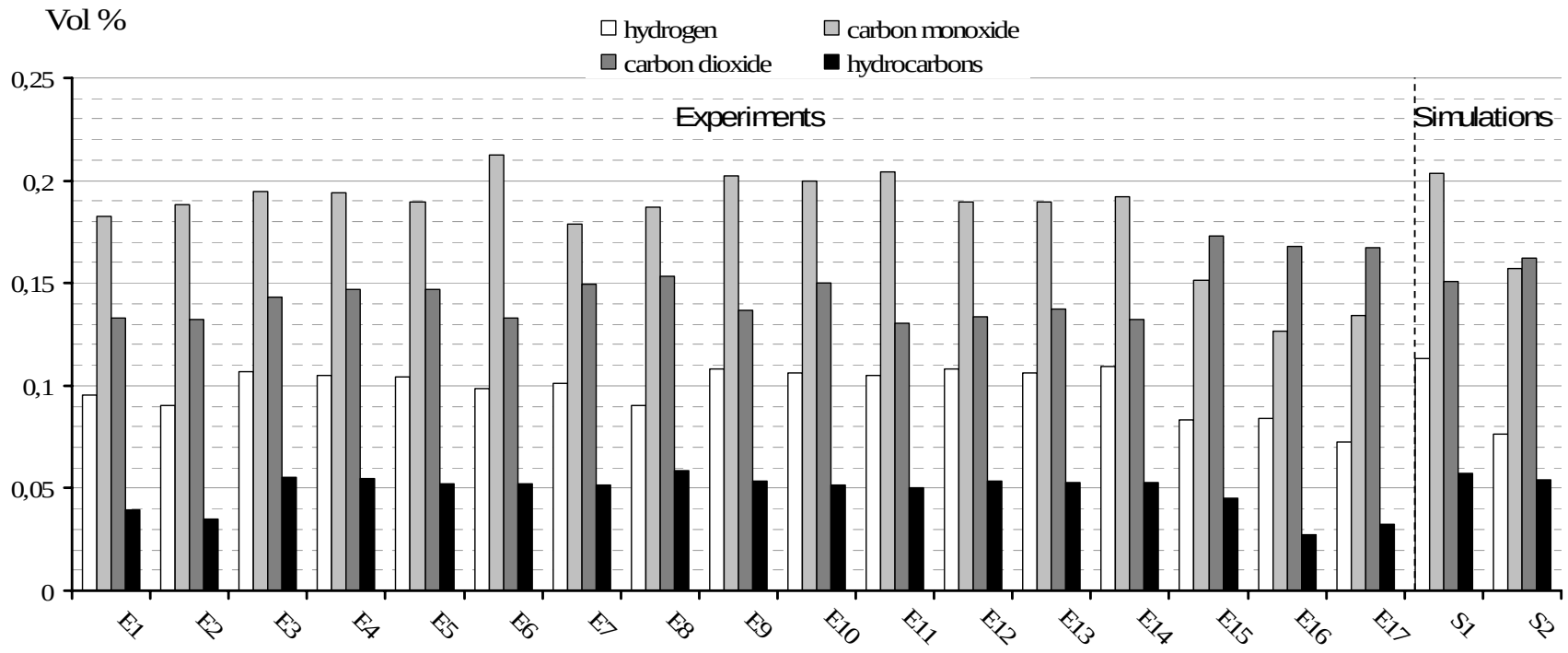

Euler-Lagrange / DEM – results

Model assumptions:

- proportional particle massloss and shrinking
- transient calculation of particle mass-loss and energy
- no heterogeneous reaction (in progress)
- no particle-particle heat transfer
- no radiation

Euler-Lagrange / DEM – results

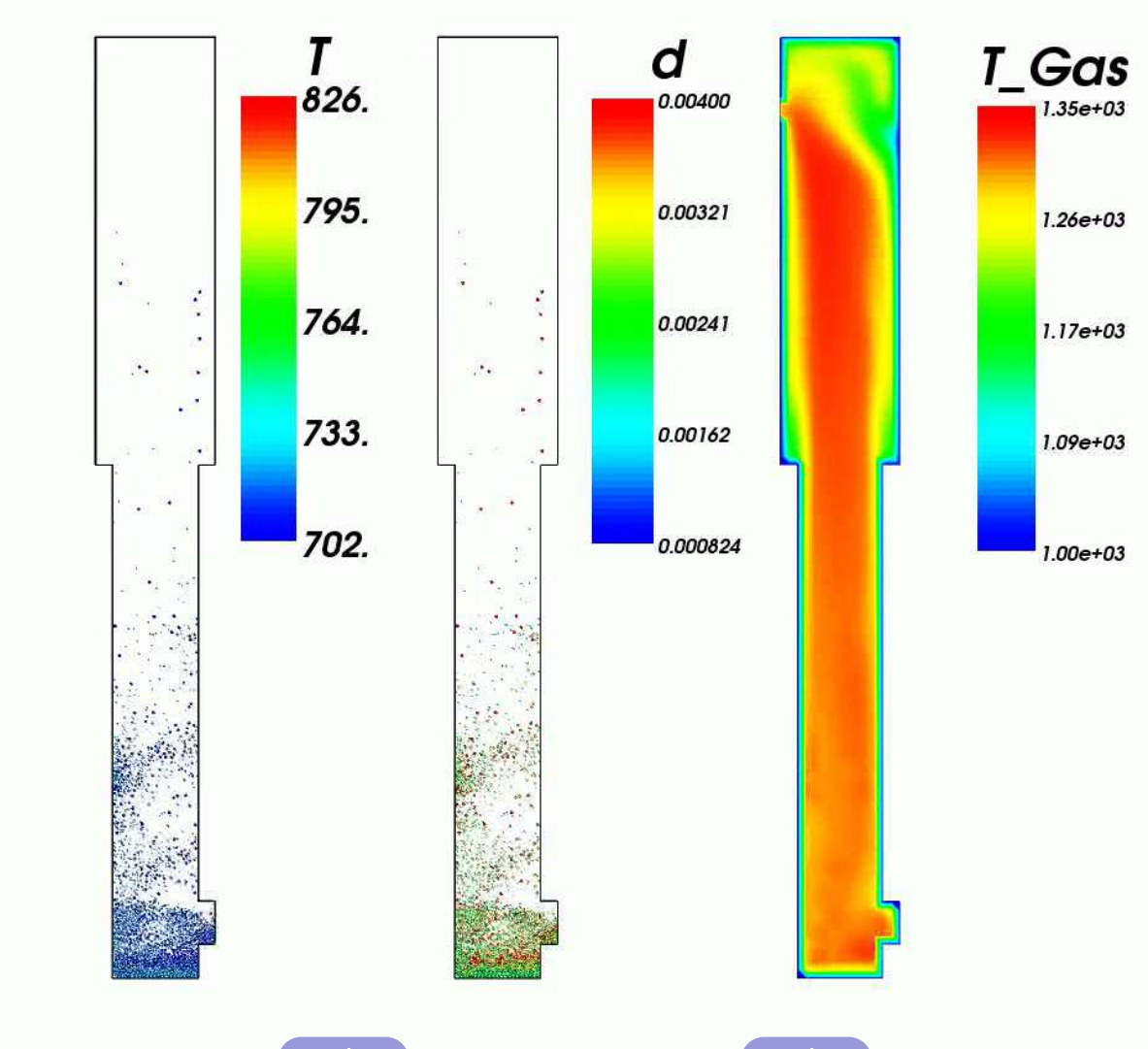

play play

Summary and outlook

- Euler-Lagrange and Euler-Euler model for wood gasification in fluidized beds
- Euler-Euler: reasonable agreement with experimental data
- Euler-Lagrange: allows detailed investigation of particle/chemistry/gas phase interactions

- Refined chemistry
- Parallelization of the DEM modell
- Quantitative comparison between Euler-Euler, Euler-Lagrange/DEM und experiments
- Coupling Euler-Lagrange with Euler-Euler methods

The financial support of the

Deutsche Bundesstiftung Umwelt (DBU)

is gratefully acknowledged!

Governing equations – Euler-Euler model

Species mass balance gas phase

$$\frac{\partial}{\partial t}(\epsilon_g \rho_g Y_{gs}) + \nabla \cdot (\epsilon_g \rho_g \vec{v}_g Y_{gs}) = \nabla \cdot (D_{gs} \nabla Y_{gs}) + R_{gs}$$

Mass balance solid phase

$$\frac{\partial}{\partial t}(\epsilon_m \rho_m Y_{ms}) + \nabla \cdot (\epsilon_m \rho_m \vec{v}_{sm} Y_{ms}) = \nabla \cdot (D_{ms} \nabla Y_{ms}) + R_{ms}$$

Governing equations – Euler-Euler model

Momentum balance solid phase

$$\frac{\partial}{\partial t}(\epsilon_m \rho_m \vec{v}_m) + \nabla \cdot (\epsilon_m \rho_m \vec{v}_m \vec{v}_m) = -\varepsilon_m \nabla p_m + \nabla \cdot \overline{\overline{\tau}}_m - \sum_{\substack{l=1 \\ l \neq m}}^{n_m} \vec{I}_{ml} + \vec{I}_{gm} + \epsilon_m \rho_m \vec{g}$$

Governing equations – Euler-Euler model

Energy balance gas phase

$$\epsilon_g \rho_g c_{pg} \left(\frac{\partial T_g}{\partial t} + \vec{v}_g \cdot \nabla T_g \right) = -\nabla \cdot \vec{q}_g + \sum_{m=1}^{N_m} \gamma_{gm} \left(T_m - T_g \right) - \Delta H_g$$

Energy balance solid phases

$$\epsilon_m \rho_m c_{pm} \left(\frac{\partial T_m}{\partial t} + \vec{v}_m \cdot \nabla T_m \right) = -\nabla \cdot \vec{q}_m - \gamma_{gm} \left(T_m - T_g \right) - \Delta H_m$$