Hydration/Reactivation of Uniformly-Sulphating Limestones

Y. Wu, E.J. Anthony and L. Jia

CETC/NRCan, Canada

IEA 47th Meeting, Turow, Poland

The Concept of Uniform Sulphation

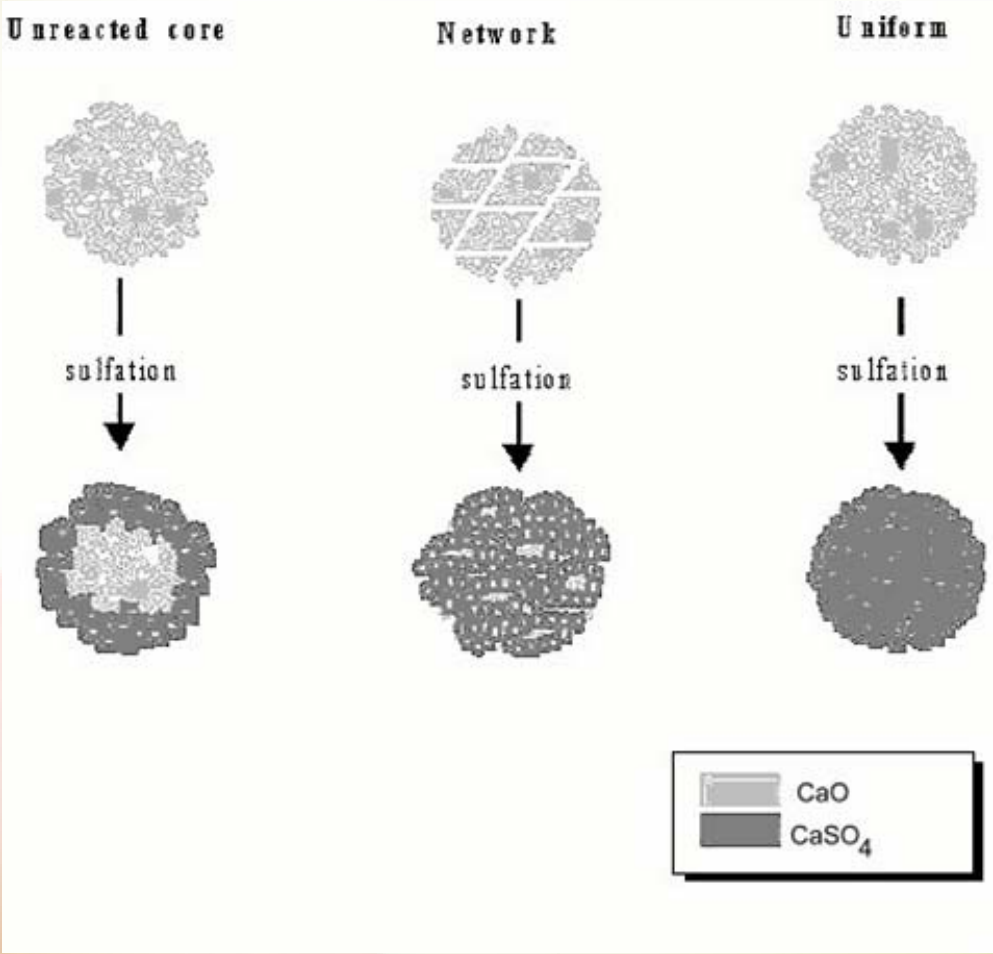

Laursen *et al*., Fuel 2000

- Showed that limestone can come in three types
- Well known: small $CaCO_3$ derived particles sulphate uniformly
- Laursen et al., first to discuss such behavior for typical CFBC particle size range & do not reactivate with steam
- Did not determine hydration levels following 15 minutes steam hydration

Fuel Paper 2001

- **Demonstrated that commercial ashes reactivate with much more difficulty than limestones**
- **Showed that one uniformly sulphating limestone reactivated by 13-17%**
  - Discounted these results for unknown reasons
- **Provided evidence of reactivation with real ashes for 3 hours of steam hydration at 250ºC but no reliable evidence of hydration with bed ashes at the higher temperature**
  - Steam temperatures: 250ºC & 450ºC

Fuel Paper 2001

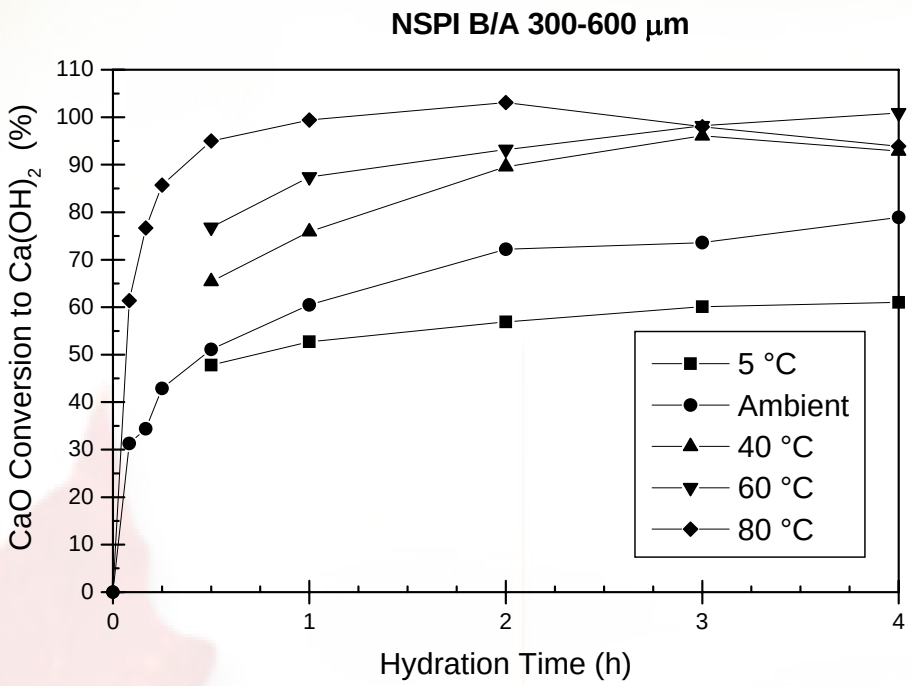

- **Demonstrated that 8-minute liquid water hydration of uniformly sulphating limestone did not reactivate sorbent**
  - Too short a hydration period!
  - **However, this suggests that the lack of activity is a property of such limestones**

2001 Singapore Conference

- **Laursen *et al*. examined 21 limestones of worldwide origin**
  - Hydration conditions now 30 minutes, changed steam partial pressure from 0.9 to 0.8 atmospheres
- **10 of the limestones were uniformly sulphating!**
- **This opens the question: Why are so many of the Laursen et al., limestones uniformly sulphating?**

Environmental and Engineering Paper 2003

- Study of steam hydration of three limestones designated: A, B and C
- Showed that limestone C, which was uniformly sulphating, did not hydrate under their conditions
- May suggest that none of the original uniformly sulphating limestones were hydrated
- Still an important result, but opens the possibility of reactivating uniformly sulphating limestones with CERCHAR type processes

Study Carried out with Calpo and Luscar

- **These limestones were supplied by CETC for Laursen *et al*., Fuel, 2000 study**
- **Both limestones 90% $CaCO_3$, but we cannot compare with Fuel study**
  - There is an error in original paper which gives composition as 78-79 % $CaCO_3$ + 2% inerts, and no SiO_2

Sulphation Carried out in TGA and Tube Furnace

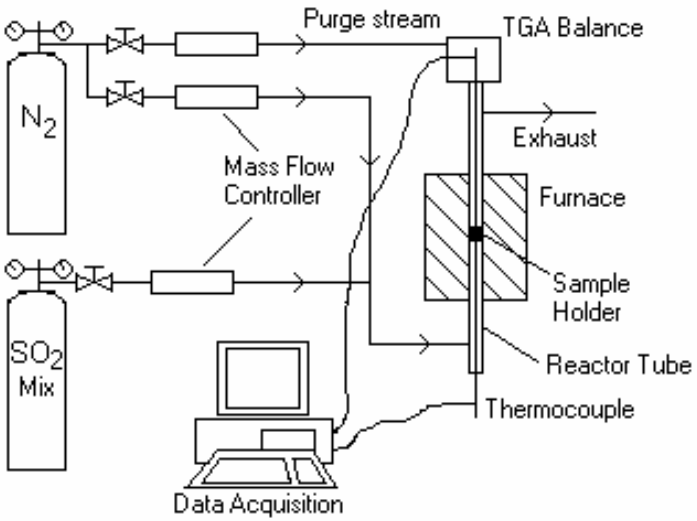

- **Bulk of experiments done in a TGA**
- **Two long-term (15 h) sulphation tests carried out on tube furnace**
- **No evidence that this makes a large difference to reactivation capacity**

Typical TGA Curve

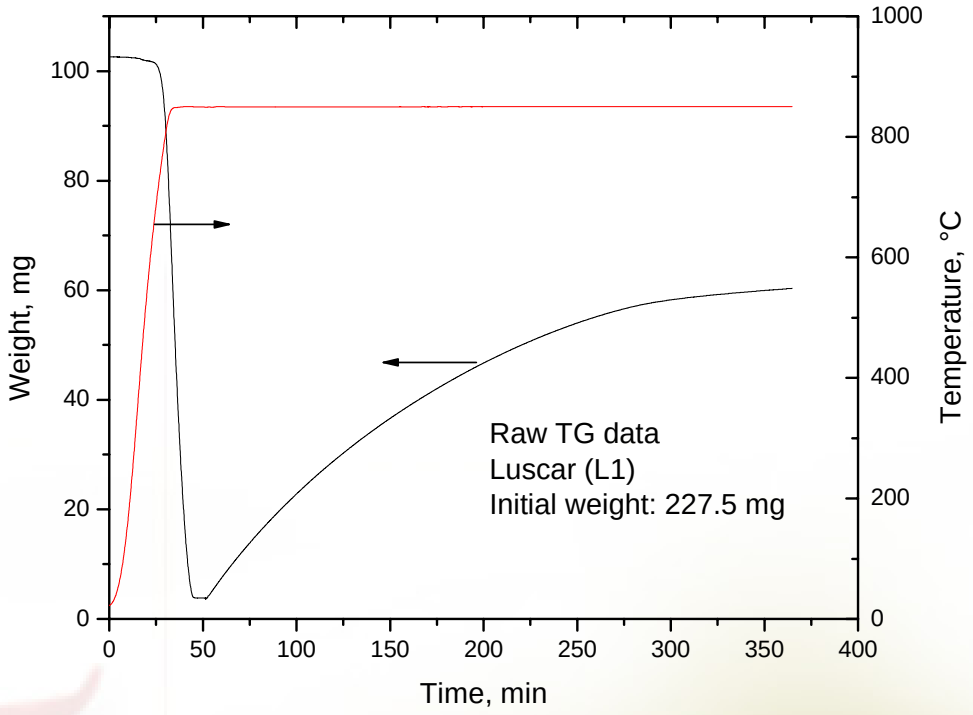

Sulphation Levels

Calpo TGA Sulphation Times	4-7 hours	Sulphation Levels	50-54%
Tube Furnace	15 hours	Sulphation Level	57.5
Luscar TGA Sulphation Times	3-7 hours	Sulphation Levels	29-32%
Tube Furnace	15 hours	Sulphation Level	32%

Liquid Water Hydration with Calpo Limestone

No Hydration	X_H = 0-7% X_H = 23%	X_{RS} = 6-12% X_{RS} = 18%
Hydration for 10 min. to 1 hour at 24 & 40ºC	X_H = 27-37%	X_{RS} = 11-18%

Liquid Water with Luscar Limestone

No Hydration	**X_H = 3-11%**	**X_{RS} = 6-12%**
Hydration for 10 min. to 1 hour at 24º & 40ºC	**X_H = 60-68**	**X_{RS} = 13-25**

Steam Hydration Results

CALPO			
$X_S = 52\%$	150°C/2h	$X_H = 22\%$	$X_{RS} = 32\%$
$X_S = 50\%$	100°C/30min	$X_H = 61\%$	$X_{RS} = 36\%$
$X_S = 58\%$	100°C/30min	$X_H = 64\%$	$X_{RS} = 39\%$
LUSCAR			
$X_S = 30\%$	150°C/2h	$X_H = 42\%$	$X_{RS} = 43\%$
$X_S = 32\%$	150°C/2h	$X_H = 60\%$	$X_{RS} = 49\%$
$X_S = 29\%$	100°C/30min	$X_H = 62\%$	$X_{RS} = 49\%$
$X_S = 32\%$	100°C/30min	$X_H = 69\%$	$X_{RS} = 49\%$

QXRD Results for C3S & L4S, wt.%

	Calpo		Luscar	
	C3S	C3S hydrated[a]	L4S	L4S hydrated[a]
$CaSO_4$	56.9	68.3	48.9	48.5
CaO	3.6	2.2	3.7	0.8
$Ca(OH)_2$	14.2	8.7	20.7	25.7
Clinochlore-1Mlb[b]	6.8	5.9	6.2	8.8
Illite-montmorillonite[c]	17.4	16.1	-	-
Phlogopite-2M1[d]	-	-	16.5	13.4
SiO_2	-	-	0.5	1.0
MgO	-	-	0.8	0.6
$CaCO_3$	-	-	-	2.7
Crystalline	98.9	101.2	97.3	101.4
Amorphous	1.1	-1.2	2.7	-1.4

Legend to QXRD Results

[a] water-hydrated at ambient temperature for 10 min

[b] $(Mg,Fe,Al)_6(Si,Al)_4O_{10}(OH)_8$

[c] $KAl_4(Si,Al)_8O_{10}(OH)_4 \cdot 4H_2O$

[d] $KMg_3(Si_3Al)O_{10}(OH)_2$

SEM Pictures

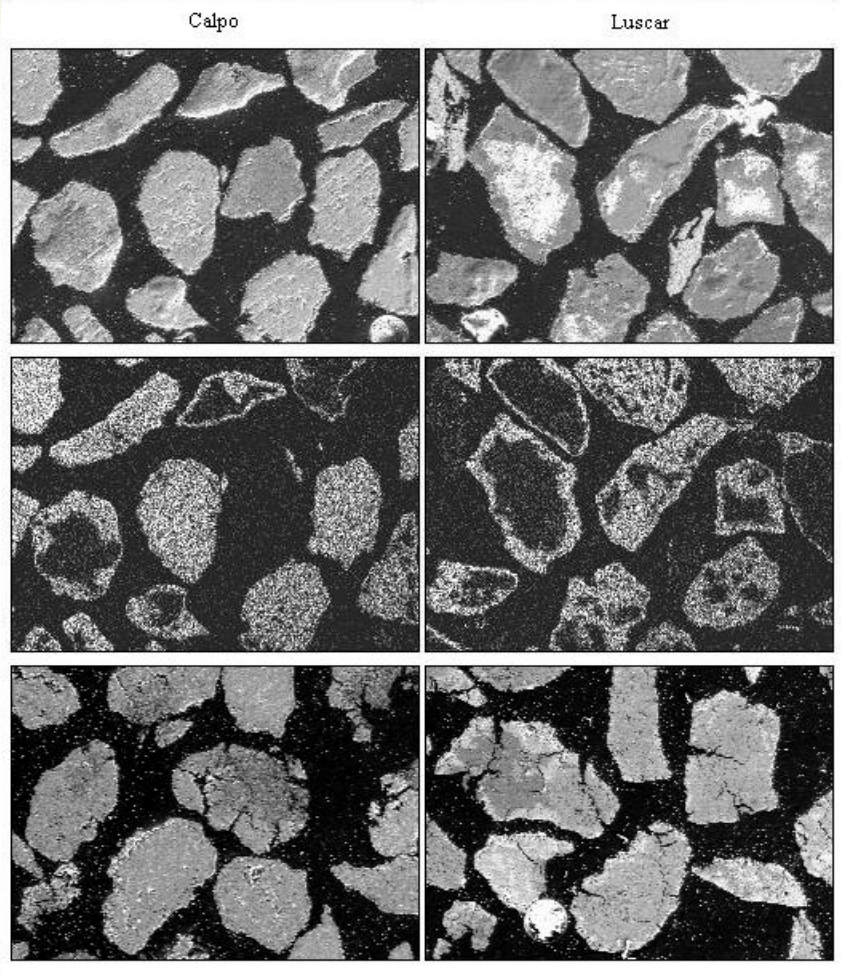

Comparison of the Sulphation Results for Hydration Studies by Laursen *et al*. [2000, 2003a] (% utilization)

	Laursen *et al*. (2000) H - 15 min			Laursen *et al*. (2001b) H - 30 min		
Limestone	**Initial**	**R**	**RH**	**Initial**	**R**	**RH**
Luscar	59	70	73	49	52	54
Strassburg	38	55	79	36	37	58
Texada Island	43	51	47	42	44	51
Lucerne Valley	31	33	47	37	37	46
Sormony	34	30	73	19	19	52

H –steam hydration time R - resulphation without hydration; RH - resulphation with hydration using 250ºC steam

Results from Hamer, 1986, for Sulphation of Calpo Limestone

Bubbling FBR	**33.9%**	**51.8%**
TGA Results	**33.8%**	**42.1%**

Conclusions

- **Partially sulphated Calpo and Luscar can be hydrated at lower temperatures than 250ºC**
- **Liquid water does not reactivate Calpo, but moderately reactivates Luscar**
- **Steam hydration both hydrates and reactivates Calpo and Luscar**
- **There is serious need for a protocol to define sulphation patterns**

Conclusions - Continued

- **Sulphation patterns of the two limestones show mixtures of particles, not in agreement with Laursen *et al*. studies!**
  - Can sulphation patterns and levels both vary?
  - Do the differences in conditions between two studies explain the differences or is it a limestone problem?
    - Laursen notes SO_2 concentrations are half of CETC studies, calcination is much slower, and sulphation sample sizes are much larger in her studies!

Future Studies

- **Extend CETC studies to conditions used by Laursen *et al*., 2000, 2001a, b, & 2003.**
- **Test "same" sample in both CETC equipment and TGR at the University of British Columbia to see if results agree when operating conditions are similar.**